Library of Rake's Corner

PDF Paper Model Kit

Juliea Stewart
Texture sourcing

Jerry Jensen
Modeling basics text

Dave Graffam
Artwork, layout



PRINTING TIPS

These PDF files are set up for the standard 28mm-30mm tabletop wargaming scale, and for US letter-sized (8.5" x 11") sheets, but should print just fine on A4-sized sheets. Turn off any 'fit to page' options in your printer driver.

For printing at model scales of smaller than 28mm/30mm, see the table below and adjust your printer size percentage settings accordingly.

GLUE AND PAPER TIPS

To get the best results, experiment with different papers and glues. Take advantage of the brightest and sharpest printing methods you have available. I prefer laser color copies printed on 110# (199 gsm) matte cardstock.

The best choice of paper and glue will depend a lot on the printing method that you choose. I use a low-moisture, tacky glue such as Aleene's Original Tacky Glue. Small dabs of ordinary white school glue usually does the trick.

When applying glue, a thin and even coat is much better than a heavy glob. Cut up excess cardstock into little squares and keep these handy so that you can spread out glue onto tabs. It's a good idea to keep some slightly-damp tissue if you need to wipe up extra glue, but be careful about this if you're using ink-based prints.

EXPERT ADVICE

Don't miss the **Paper Modeling Guide** available from **DavesGames.net**. It's loaded with tips and tricks to help you avoid mistakes and assemble a great-looking finished model.

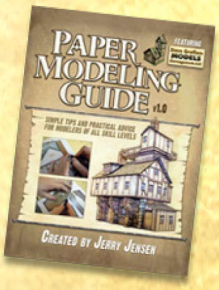

DIFFERENT SCALES

Most printers allow you to print at a percentage of the full size. Use this table to determine your gaming scale or model railroad scale and the percentage you should use.

Scale	%
28mm/30mm	100%
25mm	84%
20mm	65%
18mm (HO)	60%
15mm	50%

Scale	%
12mm	40%
10mm (N)	34%
8mm	27%
(Z)	23%
6mm	20%

Dave Graffam MODELS

DavesGames.Net

David Graffam © 2014

TOOLS

You'll need a few basic craft supplies to create this model.

- ***Scissors:*** Scotch makes good scissors designed for cutting thick paper, but almost any pair of scissors will do.
- ***Hobby knife:*** X-Acto is my favorite brand. Extra blades are recommended. Replace the blade often.
- ***Metal ruler:*** A 12" or 18" metal ruler with non-slip cork backing is good for general use. A 6" ruler will be convenient for cutting smaller sections.
- ***Cutting mat:*** A 12" x 18" self-healing vinyl cutting mat is the ideal cutting surface.
- ***Glue:*** I prefer Aleene's Original Tacky Glue or Aleene's Fast Grab Glue. You may also use Elmer's white school glue, PVC glue, or similar products.

Optionally, you may also want to acquire foamcore, a glue stick, and spray glue, although these are not necessary.

PREPARATION

Read through these instructions at least once before printing and assembling your model to help avoid any mistakes or confusion later.

When you're ready to assemble the model, print each page onto cardstock paper. 110 pound/299gsm cardstock paper is recommended, but you may print on somewhat thinner cardstock if you prefer.

Cutting: Always cut carefully and slowly. Children should never use sharp tools unsupervised. After printing your pages, cut out all of the components, cutting along their black outer lines and scoring along the remaining inner black lines.* Do not cut or score any of the gray lines. When cutting, you may use scissors if you are able to cut very straight. For long lines, or difficult-to-reach areas, or if you are not confident cutting with scissors, you should use your hobby knife and a cork-backed metal ruler as a guide.

Scoring: To score a line, lightly drag the tip (or even the *back* of the tip) of your hobby knife along that line. For best results, use a cork-backed metal ruler as a guide.

*Double-sided pieces can be produced with better results by following these cutting instructions: 1) Do not cut directly to the black outer lines; leave some white space around the piece instead. 2) Score along the central line. 3) Fold the two halves together and glue flat. A glue stick or spray glue may work well for this. Place a heavy book on top of the piece to keep it flat while it dries. 4) When dry, cut along the outer black lines. Flip the piece over and cut off any excess white paper showing.

Pre-fitting: After cutting and scoring each component, "crack" them along their score lines and fold them slightly in the proper direction. Whenever possible, press against a flat surface such as your cutting mat to easily and cleanly fold each segment. This step will let you know if you have forgotten to score any lines, and you may correct this now.

Edging: Optionally, you may use a fine-line marker to darken the white edges of the components. This will greatly improve the overall appearance of your final model. Black markers will work well for most components, but you may experiment with other marker colors for even better results.

Paper Scraps: Rather than discarding all of your unused pieces, cut these into triangles or squares about 1 inch across. These can be useful for spreading glue evenly on tabs, by using the flat sides of the paper scraps as a trowel. And they can be used to put small amounts of glue where you want them, by placing a dot of glue on the corners of a paper scrap.

ASSEMBLY BASICS

Several of the components of this model are simple "boxes" of some form. Most of these individual components can be assembled before putting them all together using the instructions below. For clarity, most of the images show the model without any textures/skins.

GROUND PIECE

This model sits on 6" x 6" ground piece. If you like, you may cut a 6" x 6" piece of foamcore and affix the Ground Piece to the foamcore, wrapping the long textured strips along the thin sides. Spray glue may work well for this. You may use thick cardboard or posterboard of foamcore, but be aware of the 1/4" width of the side strips on the Ground Piece when affixing to material thinner than standard foamcore.

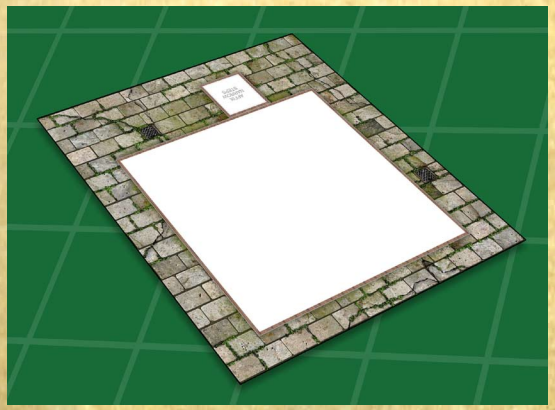

FOUNDATION WALLS

The two Foundation pieces will become the lowest part of the Library (1). Attach them along the long strips on their sides (2), forming a boxy shape that can stand up on its own (3).

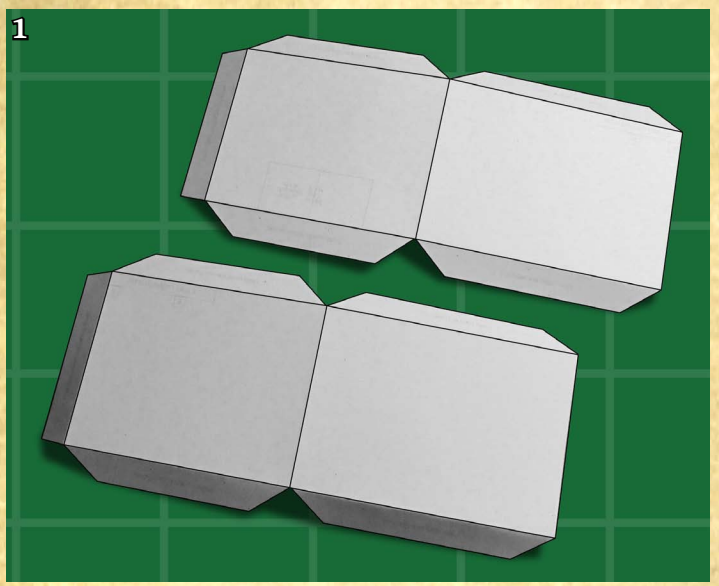

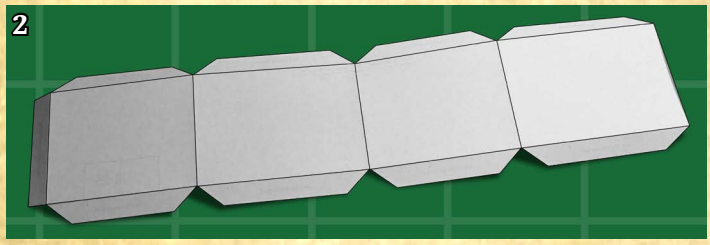

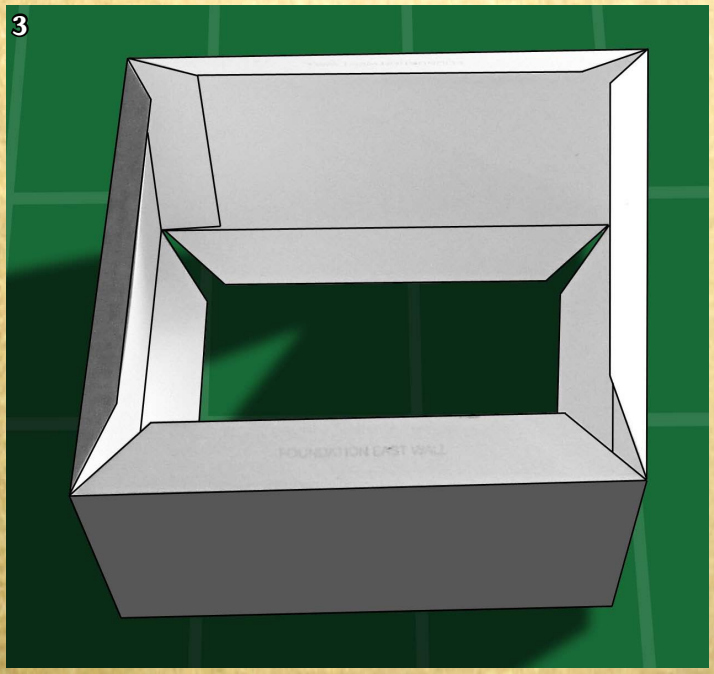

FOUNDATION REINFORCERS

These two pieces will give additional strength to the Foundation structure. They are simply long boxes. Affix these assembled reinforcers inside of the upper corners of the Foundation (4).

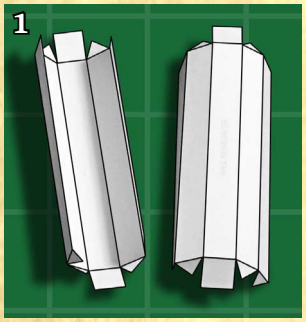

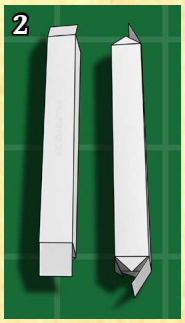



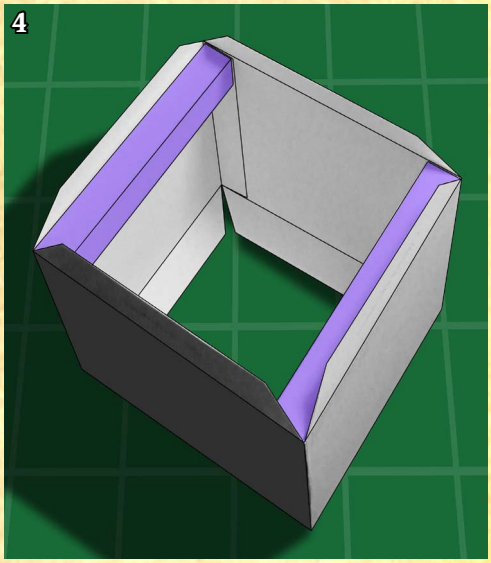

FOUNDATION AND GROUND PIECE

When the Foundation and its reinforcers are fully dry, affix the Foundation to the indicated position on the Ground Piece.

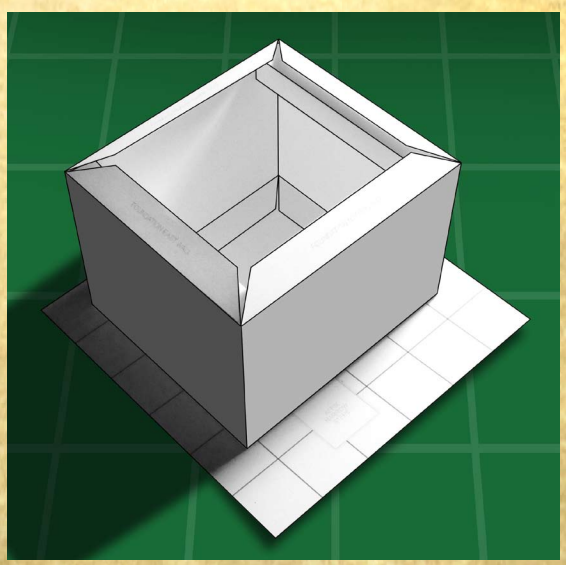

STEPS

After cutting and scoring, making sure to score ***forward*** along the indicated lines (1), then glue the *first* and *last* steps only (2). When dry, it will be easy to affix the remaining steps. Put a small amount of glue on the corner of a scrap of cardstock, and wedge that glue into the small gaps (3). Then press the sides until they are dry. Finally, affix the Steps in place in the indicated position (4).

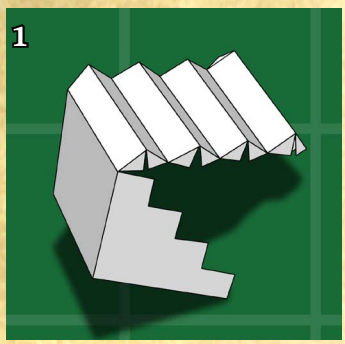

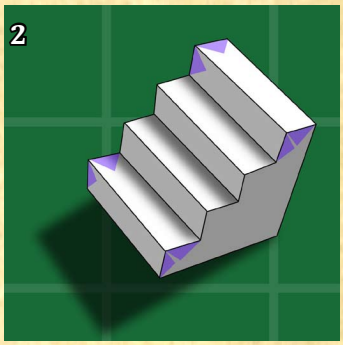

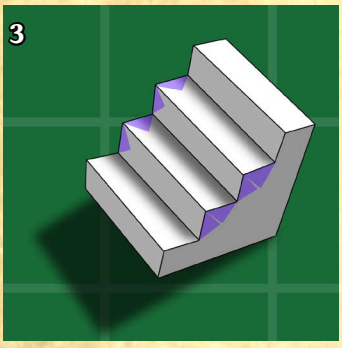

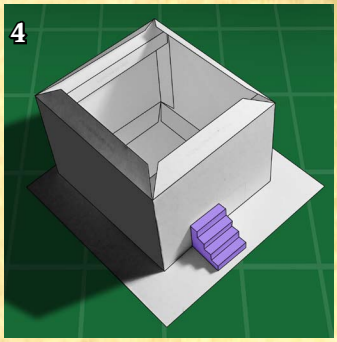

STEP RAILINGS

Optionally, you may add Railings to the Steps. These are simple double-sided pieces. Score along the center line of each piece (1). Fold in half, then glue flat (2). When dry, affix the Step Railings along the sides of the Steps (3).

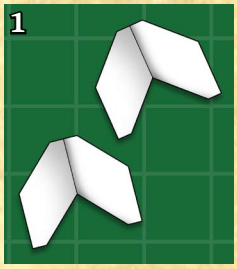

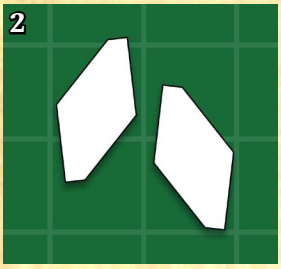

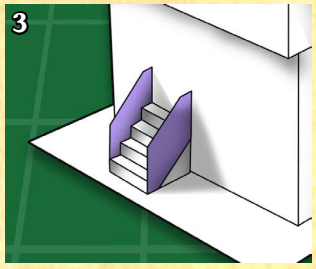

TOWER WALLS

The Tower section of the Library is assembled much like the Foundation. Assemble the two wall sections (1) into a single piece (2), then assemble that piece into a boxy shape that stands on its own (3).

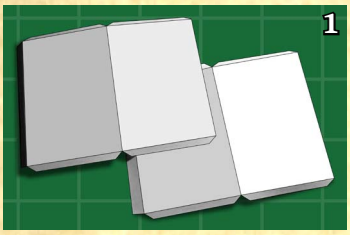

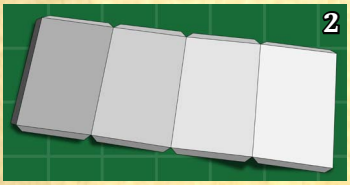

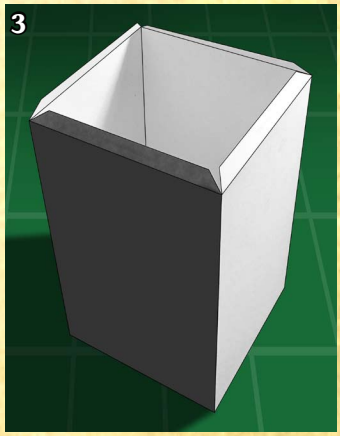

TOWER REINFORCERS

Build the four Tower Reinforcers (which are simply long boxes). When dry, affix these Reinforcers at the four corners of the Tower Walls.

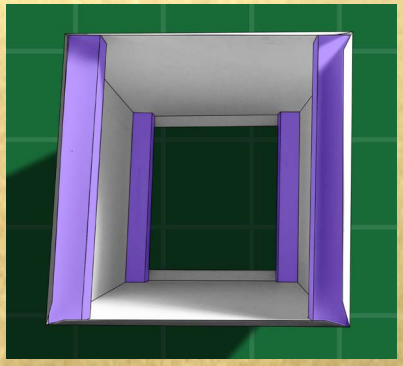

TOWER FLOOR

Turn the Tower Walls upside down and affix the Tower Floor piece to the bottom. Pay special attention to the North-South-East-West markings and make sure that these match the Tower Walls.

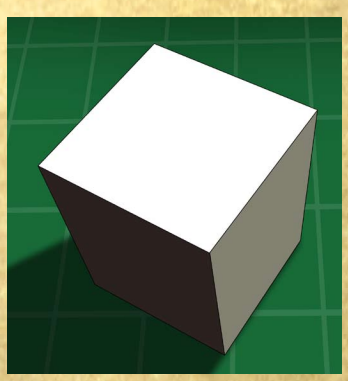

JOIN FOUNDATION AND TOWER

Affix the Tower Walls on top of the Foundation Walls. Be sure to match the North-South-East-West markings on the Tower Floor with the tops of the Foundation Walls.

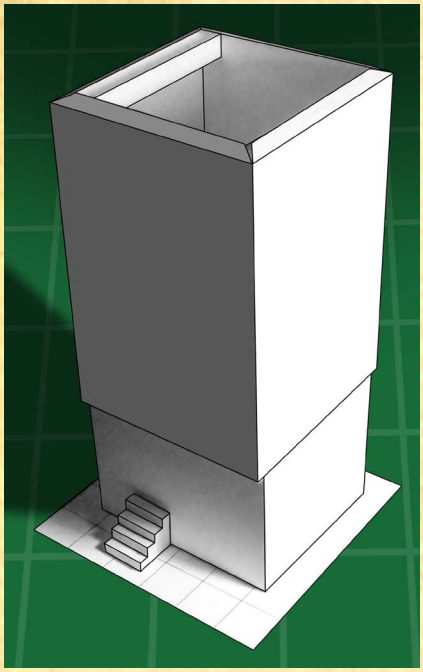

Modeling Tip: When affixing dormers, reach inside the Tower and press against the inner wall to give a better seal.

DORMER 1

This is the most complex of the Library's dormers, but the main section is basically a box with an open side. Start with any of the Dormer Walls' glue-tabs and carefully continue gluing nearby tabs until the piece "folds up" into its final shape (2). While this piece dries, assemble the dormer beams (2-3).

To create the roof piece, first fold all of the wood-textured "overhang" tabs underneath and glue flat (1-2). When dry, you may affix the roof and beams to the top of the main dormer walls right away (2-3), or wait until after you have placed the main dormer piece onto the Foundation/Tower (4).

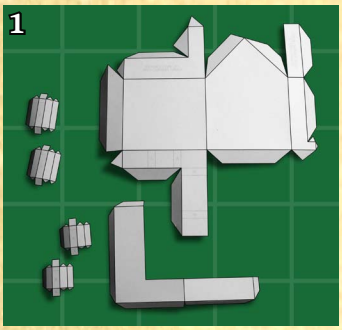

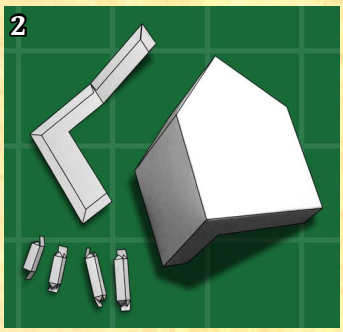

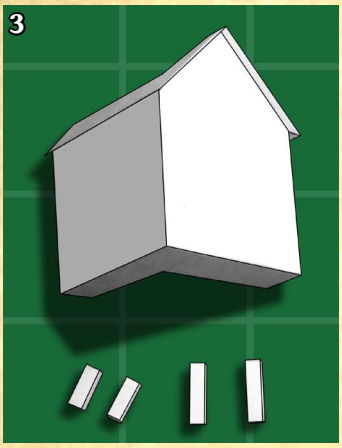

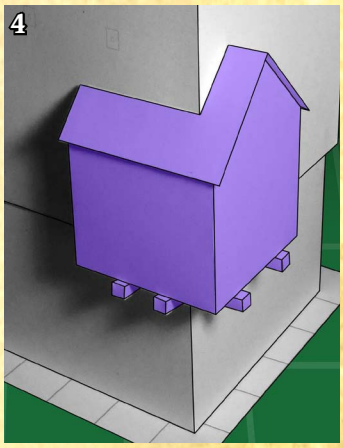

DORMER 2

Assemble the dormer's main walls, beams and roof using the methods that should be familiar to you by now (1-2). Affix in the indicated position on the Tower (3).

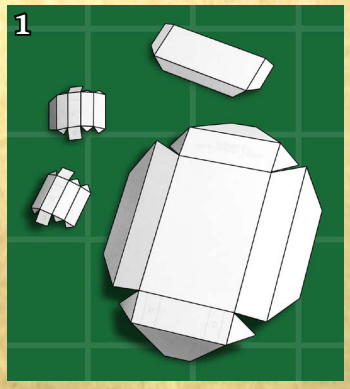

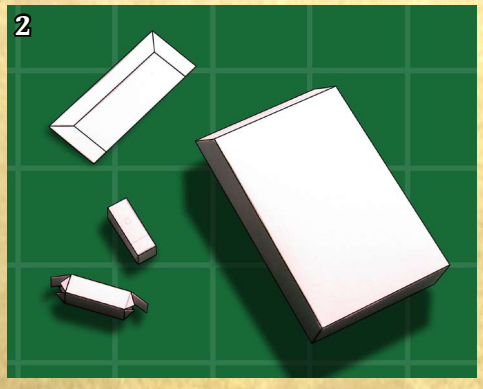

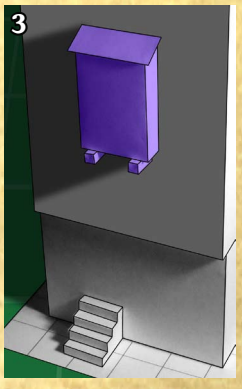

BALCONY

Assemble the main Balcony Platform and Beams. These are basically long boxes (1-3). Affix the Beams to the Balcony Platform (4).



BALCONY RAILINGS

These are simple double-sided pieces (1). Score along the center line of each piece, Fold in half, then glue flat (2). When dry, affix the Short Railings and Long Railing along the sides of the Balcony Platform (3). Finally, affix the assembled Balcony to the Tower (4).

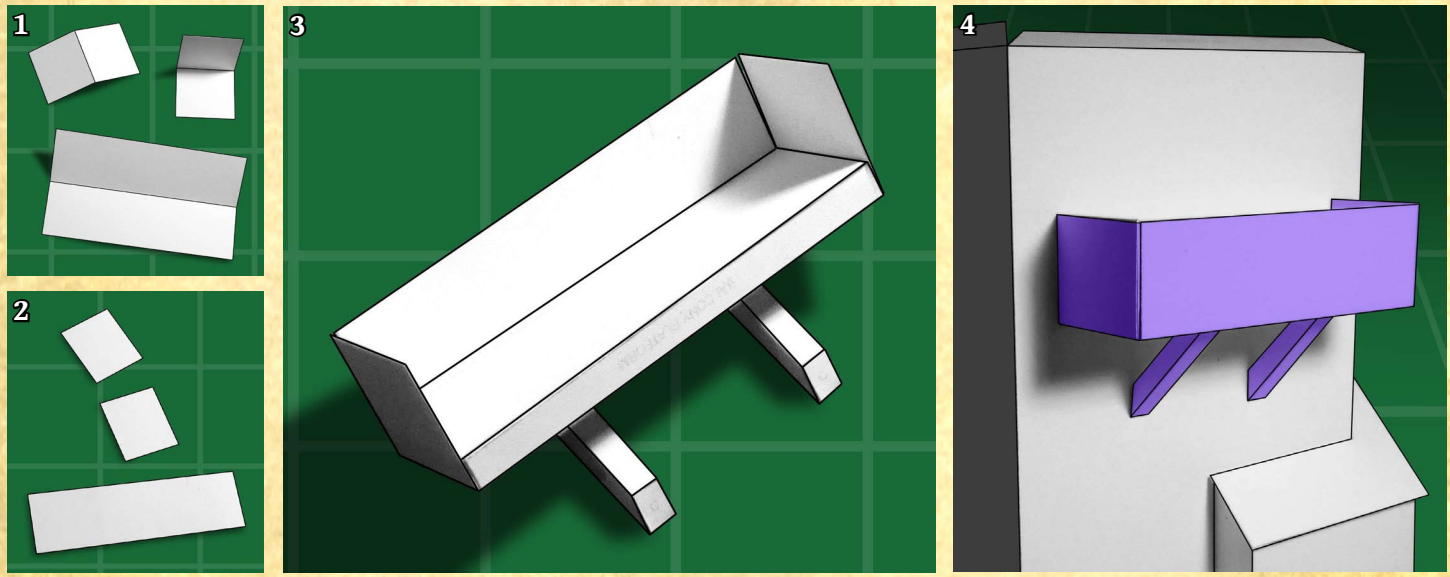

ROOF REINFORCER

Assemble the Roof Reinforcer piece, which is a simple long box.

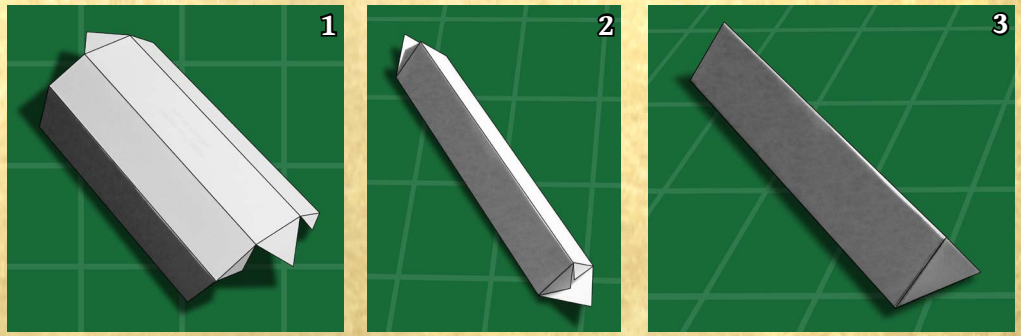

ATTIC: Part 1

Affix the Attic Floor piece to the Attic Walls (1-2). Then affix the Roof Reinforcer, starting by standing it up and gluing it against the inside of the top roofline (3). Then fold the two Attic pieces inward and finish gluing the Roof Reinforcer in place (4).

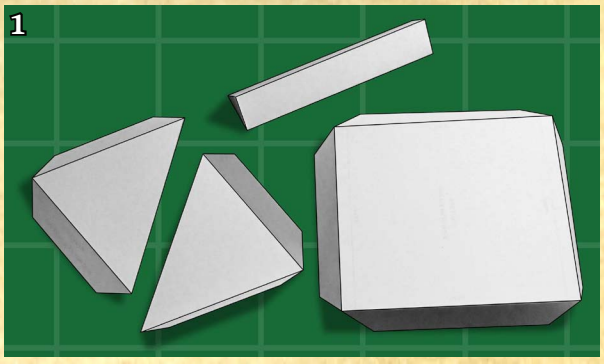

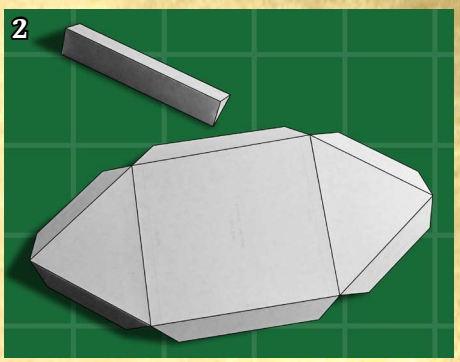

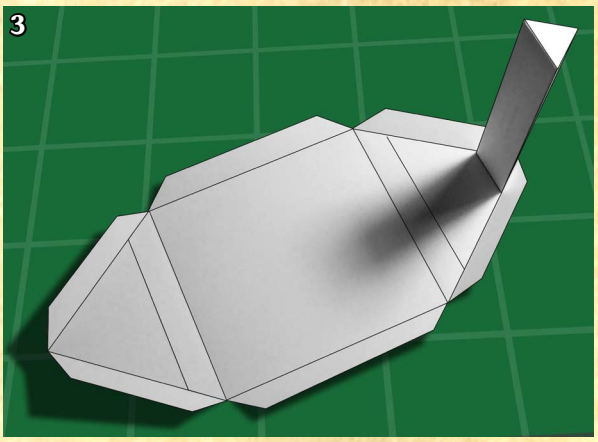

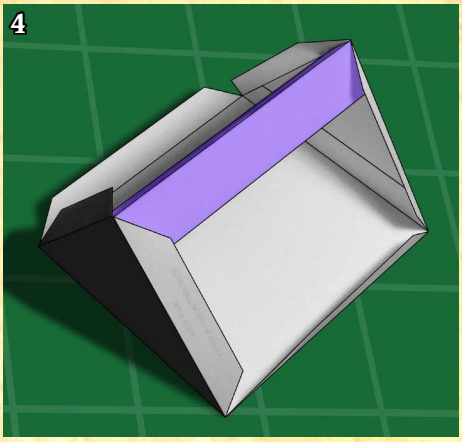

ROOF

Create the main roof piece in the usual way, folding the wood-textured "overhang" tabs underneath and gluing flat (2).

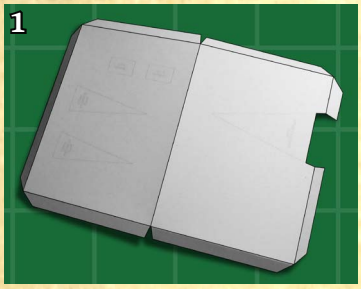

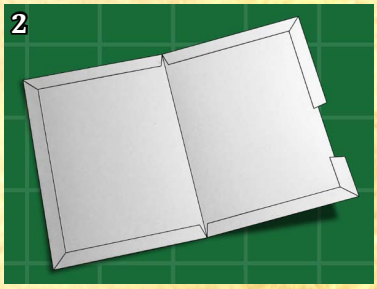

ATTIC: Part 2

Lay the Roof piece flat, with the main texture side facing down. Turn the Attic onto its side and center it over one half of the Roof, with the peak-lines of the Attic and Roof aligned (1-2 are two views of the same). Affix one half of the Attic to the Roof piece and allow to dry. Then glue the remaining half (3).

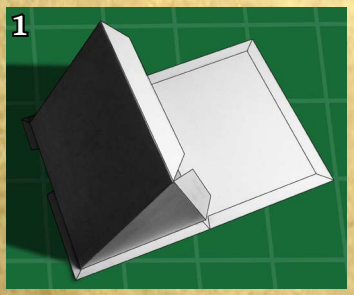





AFFIX ATTIC TO TOWER

When the entire Attic and Roof assembly is dry, affix that whole piece centered on top of the Tower/Foundation. Match the North-South-East-West markings on the Attic Floor with the tabs on the top of the Tower.

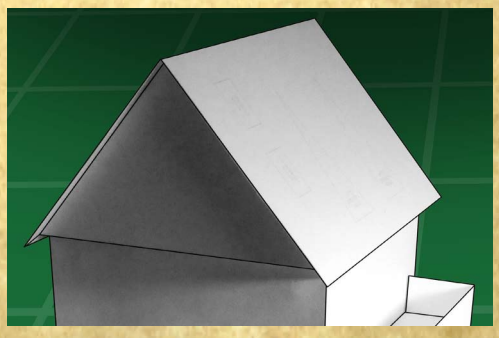

DORMER 3

The main walls of this dormer are basically a box with one open side. Start with any of the Dormer Walls' glue-tabs and carefully continue gluing nearby tabs until the piece "folds up" into its final shape (2). While this piece dries, assemble the dormer Beams (2). To create the Roof piece, first fold all of the wood-textured "overhang" tabs underneath and glue flat (1-2). When dry, you may affix the Roof and Beams to the top of the main Dormer Walls right away, or wait until after you have placed the assembled dormer onto the Tower/Attic in the indicated position (4).

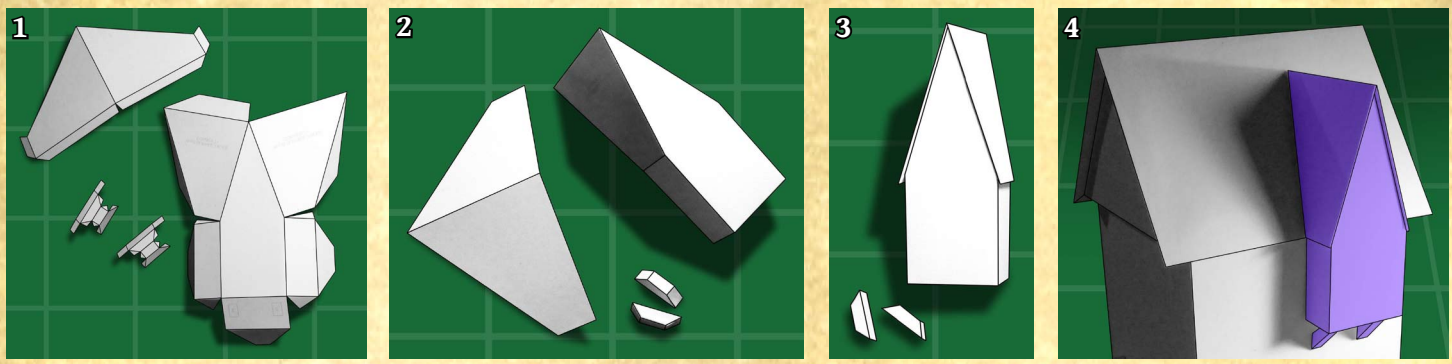

DORMER 4

This is a simple triangular roof dormer. To assemble this, start with any of the Dormer Walls' glue-tabs and carefully continue gluing nearby tabs until the piece "folds up" into its final shape (2). To create the Roof piece, first fold all of the wood-textured "overhang" tabs underneath and glue flat (2). Lay the Dormer flat against your cutting surface, then add the Roof, leaving a slight overhang (3). Finally, affix the assembled dormer in the indicated position (4).

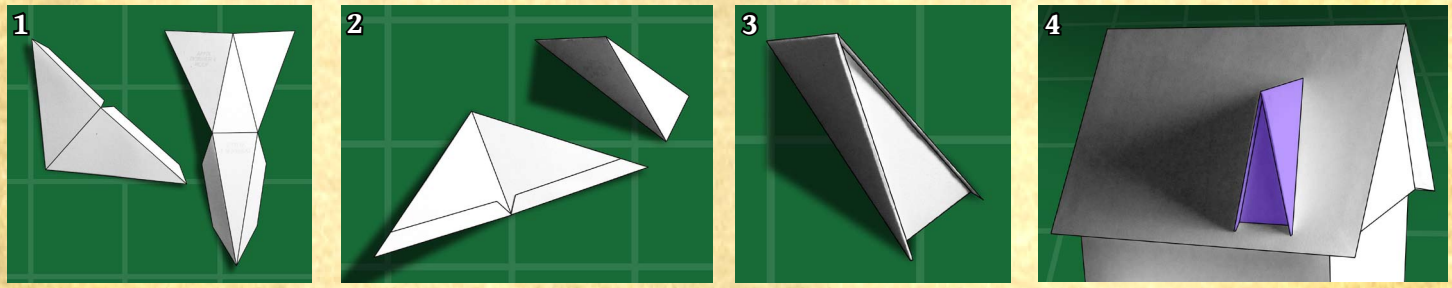

CHIMNEYS

The Chimneys are basically long boxes. The Chimney Pipes are optional, as they may be too small to assemble when printing the Library at smaller scales. If used, the assembled Chimney Pipes should be affixed over the chimney vent graphics at the tops of the Chimney pieces. When the Chimney and Chimney Pipes are assembled and dry (3), affix them in place in the indicated positions on the Roof (4).

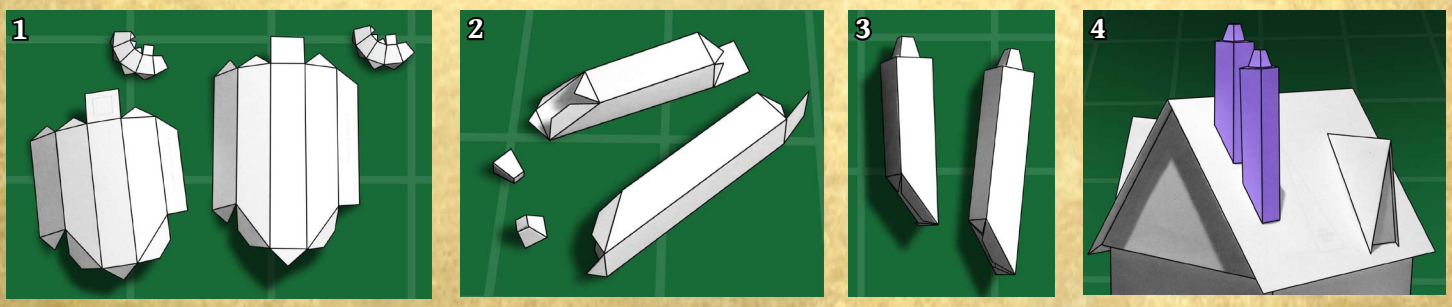

Your model is now complete.